argenta®
opening doors

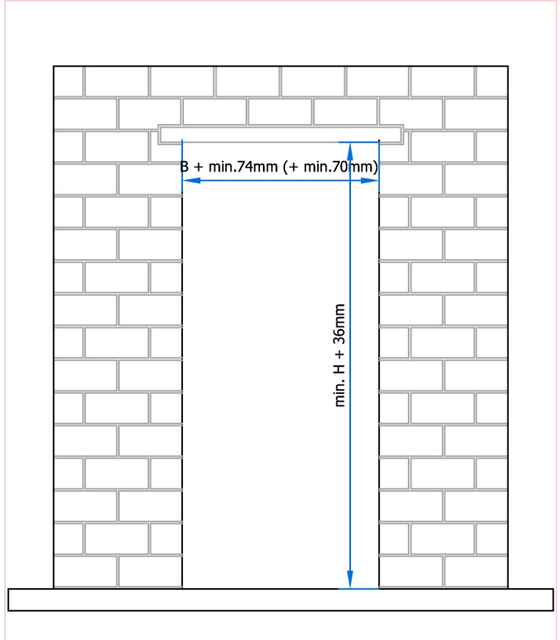

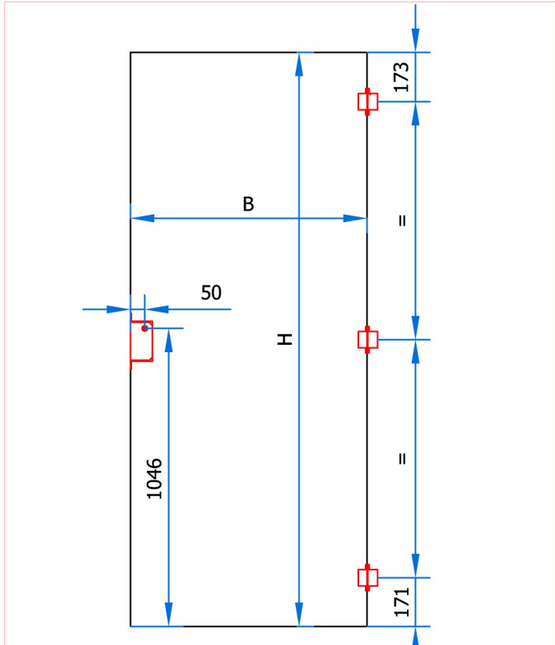

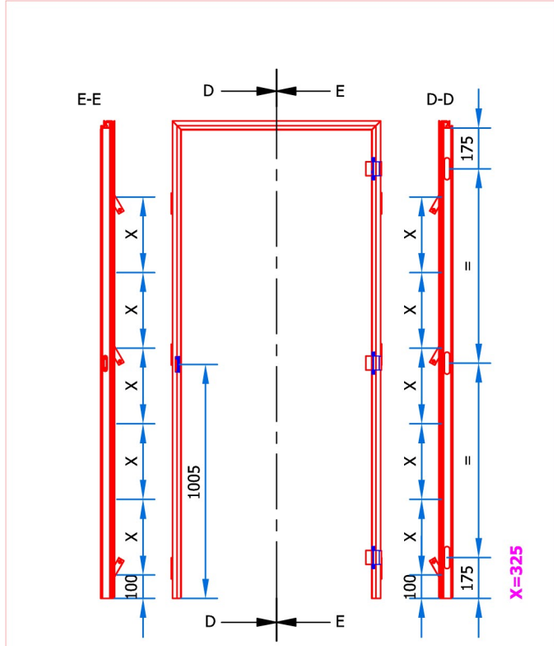

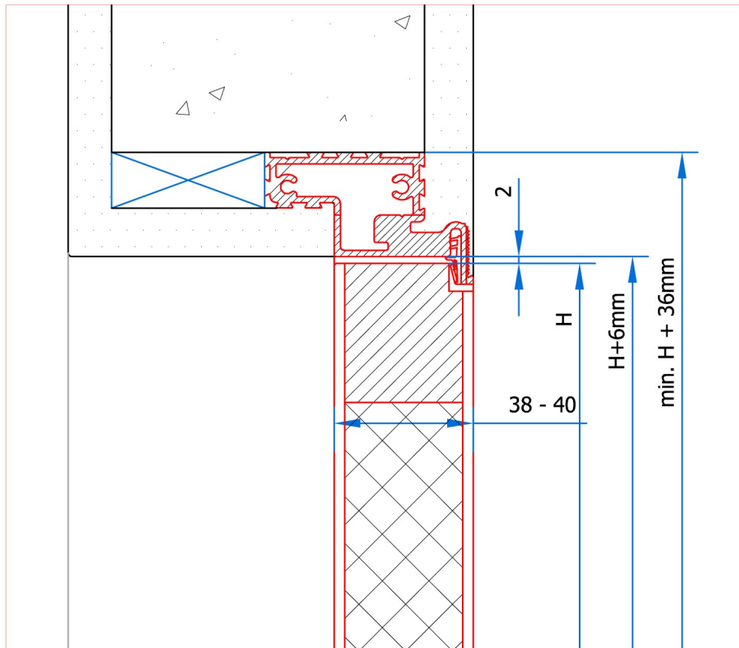

Legende
1. Profil Invisidoor IN
2. Plaque de plâtre
3. Finition du coin
4. Enduits pour plaque de plâtre

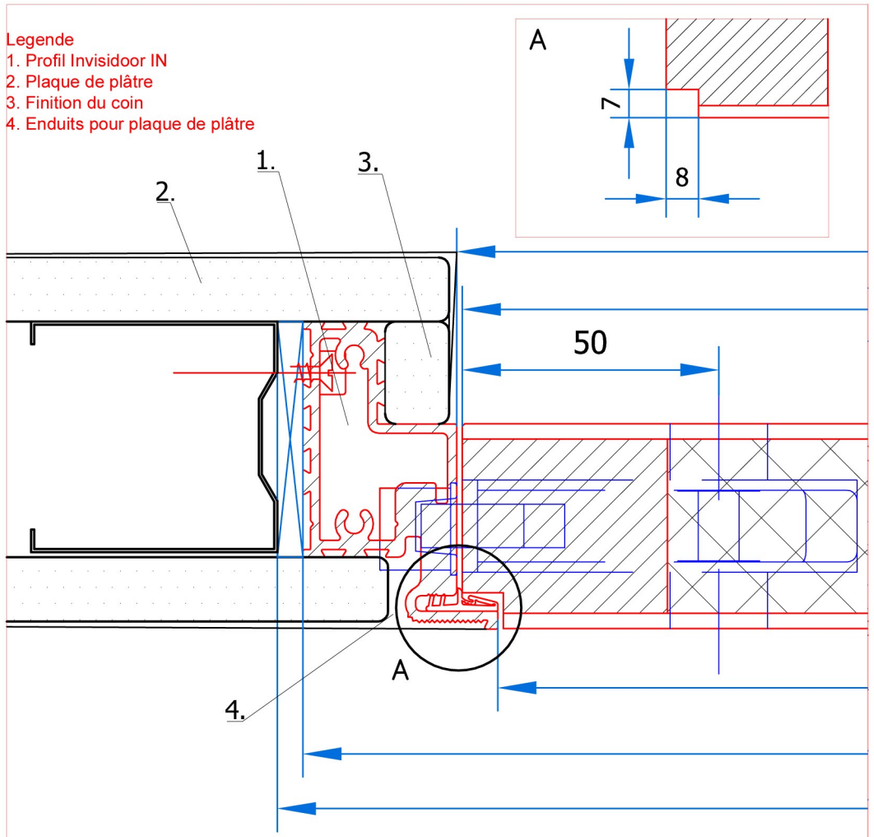

Legende
1. Profil Invisidoor IN
2. Plâtre
3. Matériaux pour remplir (isolation, plaque de plâtre)
4. Doguets

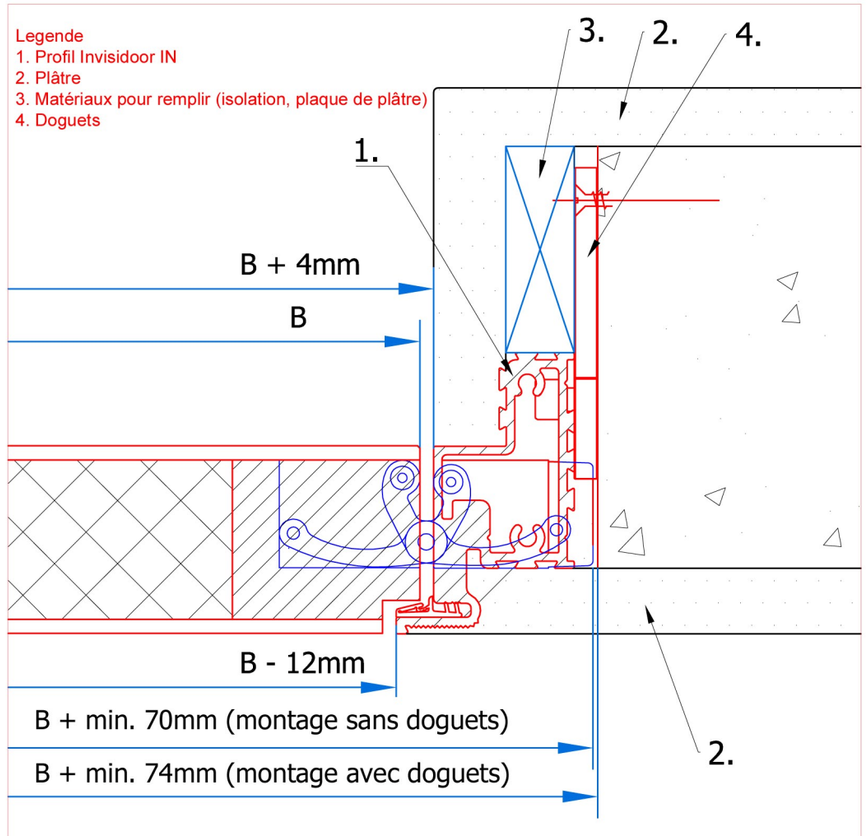

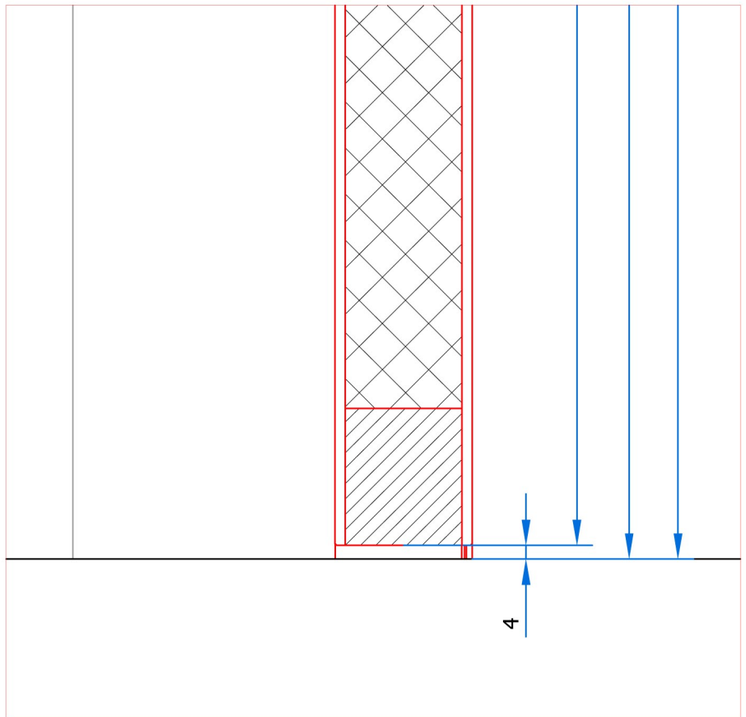

Author : BC	Creation Date 1/02/2012
Title . Invisidoor IN	
Part/Ref. Brick	File:

This drawing is owned by NV Argent Alu and may not be copied or shown to third parties without written consent